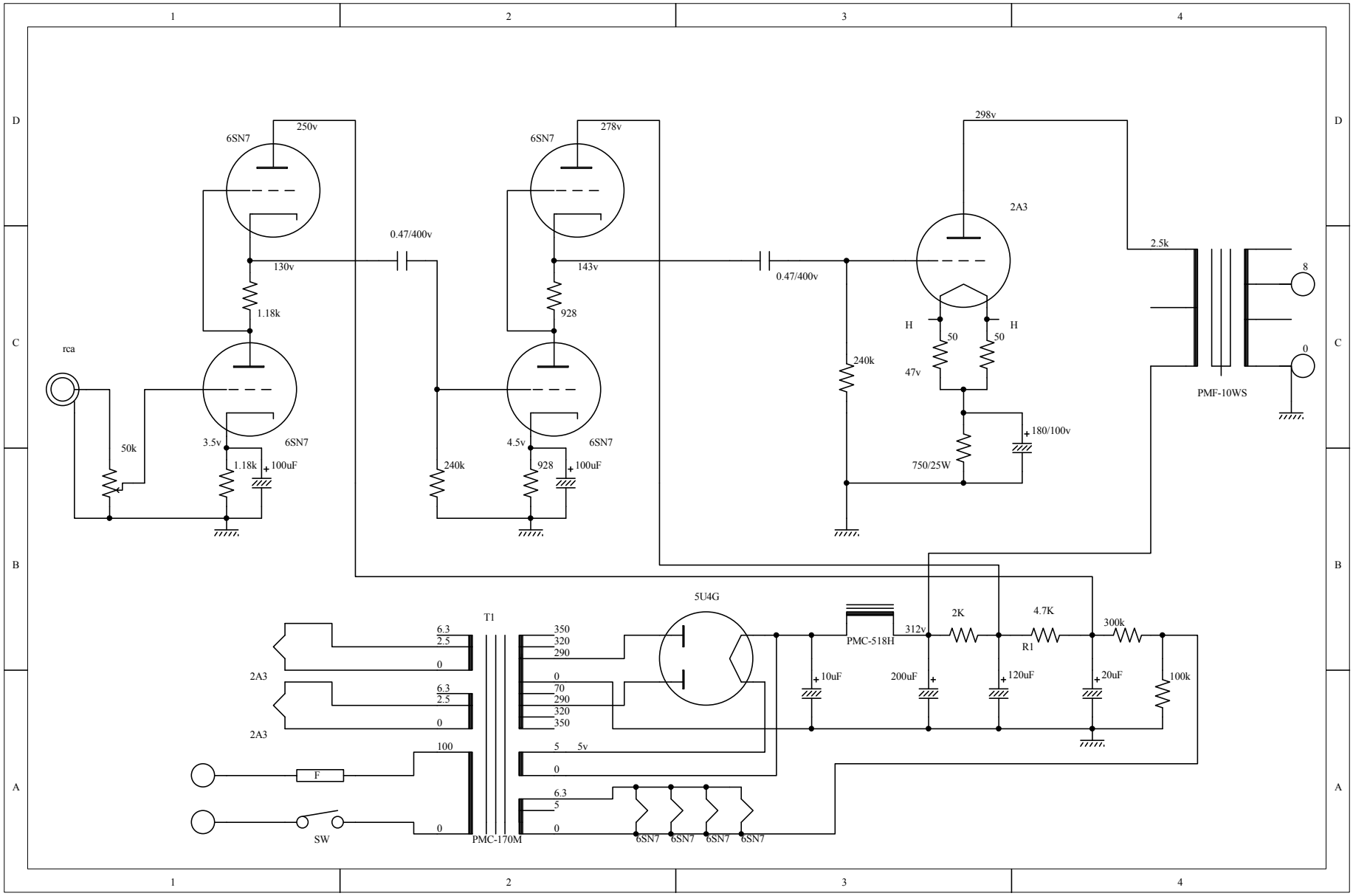
6SN7
250v
130v
1.18k
0.47/400v
rca
50k
3.5v
6SN7
1.18k
100uF
6SN7
278v
143v
928
240k
4.5v
6SN7
928
100uF
0.47/400v
298v
2A3
240k
H
50
50
H
47v
750/25W
180/100v
2.5k
8
0
PMF-10WS
5U4G
T1
6.3
2.5
0
2A3
6.3
2.5
0
2A3
350
320
290
0
70
290
320
350
100
5
5v
0
6.3
5
0
F
SW
PMC-170M
6SN7
6SN7
6SN7
6SN7
PMC-518H
312v
2K
4.7K
R1
300k
10uF
200uF
120uF
20uF
100k